DESCRIPTION OF ORDER NO.:

66773M 02 1 X

CIRCUITS NO.

TYPE NO.
SINGLE ROW

MATERIAL NO.
0= PA66 94V-0 PLASTICS, WHITE COLOR
1= PA66-GF PLASTICS, LIGHT IVORY COLOR

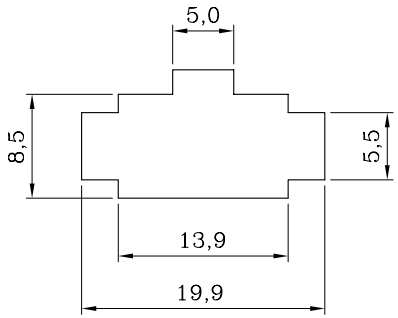

PANEL HOLE DIMENSION

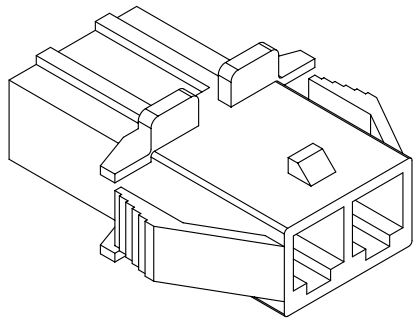

ISOMETRIC VIEW

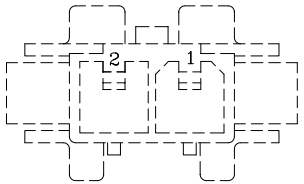

PIN ASSIGNMENT
(WIRING SIDE)

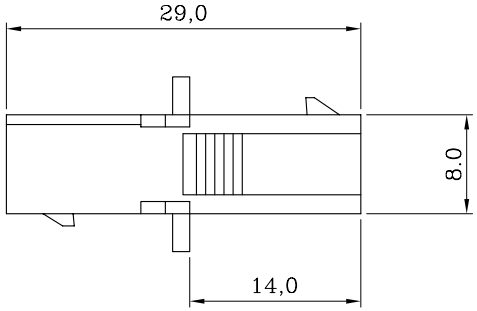

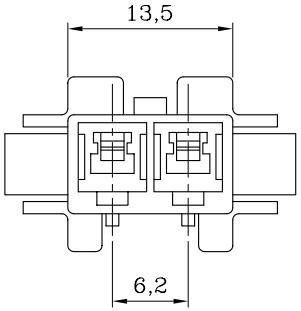

NOTES:

1. MATERIAL:
   BASE (No.=0): PA66 94V-0, WHITE COLOR
   BASE (No.=1): PA66-GF 94V-0, LIGHT IVORY COLOR
2. MATES WITH 66774F021X SERIES PLUG HOUSING.
3. USE WITH 66773A021X-X SERIES CABLE RETAINER.
   .USE WITH 66773T/66774T SERIES CRIMP TERMINAL.
4. DESCRIPTION OF COLOR NO.:
   LEGEND: 66773M021X-X (-X: COLOR NO.)
   B=BLACK, E=BLUE, H=GRAY,
   I=BRICK RED, R=RED, W=BROWN
5. REPLACEMENT OF HALOGEN-FREE PRODUCT (PA66-GF PLASTICS):
   LEGEND: 66773M0211-XNH (NH: HALOGEN-FREE)
   LEGEND: 66773M0211-SNH (S=LIGHT IVORY/NATURAL COLOR)
6. INFORMATION IN THIS DRAWING IS NOT CONSIDERED AS FINAL.

REV.	REVISION RECORD	DATE
W1	NEW RELEASE	31-DEC-14'

MATERIAL: SEE NOTES
FINISH(COLOR): SEE NOTES

RoHS Compliant REACH Compliant

Sales Drawing

LANDWIN 聯盈電子股份有限公司
LANDWIN ELECTRONIC CORP.

GENERAL TOLERANCE:	PROJECTION	SCALE	UNIT	SHEET NO.	REV
		FREE	MM	1 / 1	W1

DRAWN R.G.
CHECKED J.L.Lin
APPD H.Y.Lin
DATE 31-DEC-14'
ANGULAR ±3°

DRAW NO.
(AQ) 66773M021X

TITLE:
6.2 PITCH SINGLE-ROW
RECEPTACLE HOUSING

THIS DRAWING CONTAINS INFORMATION THAT IS PROPRIETARY TO LANDWIN ELECTRONIC CORP. SHOULD NOT BE USED WITHOUT WRITTEN PERMISSION.