Ordering Information:

Circuits	Part No. (Reflow tin-plated, Ivory color)	Dimension A	Dimension B
2	1501P02S0T	1.5	6.0
3	1501P03S0T	3.0	7.5
4	1501P04S0T	4.5	9.0
5	1501P05S0T	6.0	10.5
6	1501P06S0T	7.5	12.0
7	1501P07S0T	9.0	13.5
8	1501P08S0T	10.5	15.0
9	1501P09S0T	12.0	16.5
10	1501P10S0T	13.5	18.0
11	1501P11S0T	15.0	19.5
12	1501P12S0T	16.5	21.0
13	1501P13S0T	18.0	22.5

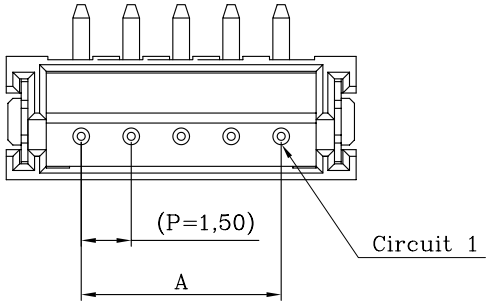

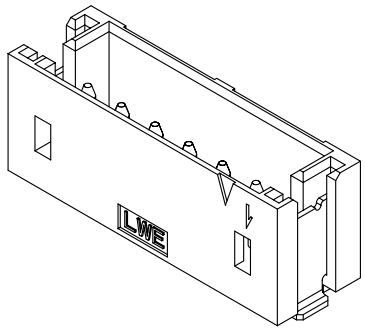

ISOMETRIC VIEW

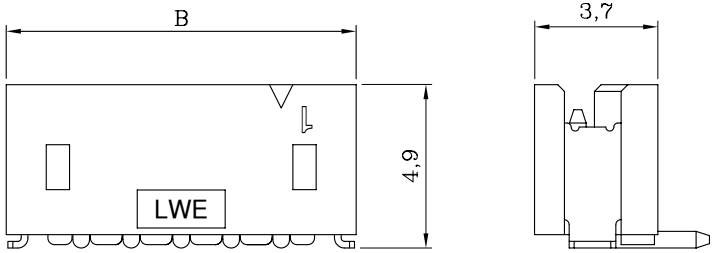

ORDER INFORMATION:

1501P XX S 0 X

- CIRCUITS NO. — XX
- TYPE NO. — S
- PLATING NO. — X
  - T= REFLOW TIN-PLATED

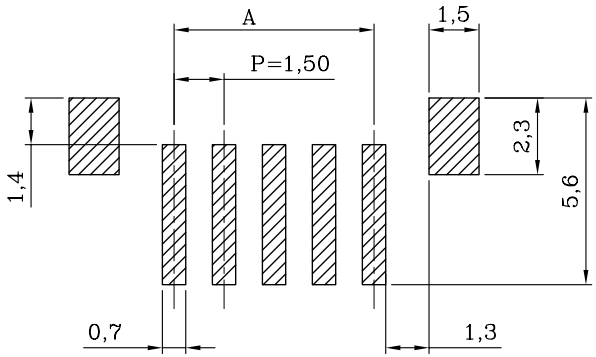

P.C. BOARD LAYOUT

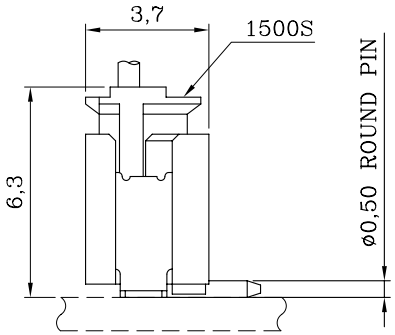

ASSEMBLY LAYOUT

NOTES:

1. MATERIAL:
   BASE: HIGH HDT NYLON 94V-0, IVORY COLOR (NATURAL)
   CONTACT PIN: BRASS
2. MATES WITH 1500S SINGLE-ROW SERIES PLUG HOUSING.
3. DESCRIPTION OF COLOR CODE:
   LEGEND: 1501PXXS0X-X (-X: COLOR CODE)
   B=BLACK, C=COCONUT BROWN, E=BLUE, H=GRAY,
   I=BRICK RED, M=GREEN, R=RED, W=BROWN, S=NATURAL
4. REPLACEMENT OF HALOGEN-FREE PRODUCT:
   LEGEND: 1501PXXS0X-XNH (NH: HALOGEN-FREE)
   LEGEND: 1501PXXS0X-SNH (S=IVORY COLOR/NATURAL)
5. Q'ty per 330 mm Dia. Panel: 1,000 PCS/Embossed Tape Reel
6. INFORMATION IN THIS DRAWING IS NOT CONSIDERED AS FINAL.

RoHS Compliant REACH Compliant

Sales Drawing

MATERIAL: SEE NOTES
FINISH(COLOR): SEE NOTES

REV.	REVISION RECORD	DATE
W1	NEW RELEASE	31-DEC-14'

LANDWIN 聯盈電子股份有限公司 LANDWIN ELECTRONIC CORP.

GENERAL TOLERANCE:	PROJECTION	SCALE	UNIT	SHEET NO.	REV
ANGULAR ±3°		FREE	MM	1 / 1	W1

DRAWN R.G.
CHECKED J.L.Lin
APPD H.Y.Lin
DATE 31-DEC-14'

DRAW NO. (CQ) 1501PXXS9X

TITLE: 1.50 PITCH SINGLE-ROW STRAIGHT SMT-HEADER

THIS DRAWING CONTAINS INFORMATION THAT IS PROPRIETARY TO LANDWIN ELECTRONIC CORP. SHOULD NOT BE USED WITHOUT WRITTEN PERMISSION.